GPM Eliminator™
MADE TOUGH

Dewatering Done Better

DURABLE. RELIABLE. DEPENDABLE.

GPM's lineup of industry-leading pump manufacturers including the Made Tough GPM-Eliminator are used in some of the toughest dewatering applications found anywhere in the world. With pump options including submersible, self-priming, vertical turbine, extended shaft and more, GPM is your one-stop pump shop for dewatering solutions.

Turnkey Dewatering Solutions

GPM is your best choice for turnkey dewatering systems. With a world-class pump offering, we will help design, engineer, manufacture and commission dewatering packages ranging from a single pump to multiple floating pump houses, complex barge systems, self-priming mobile pumping stations and much more.

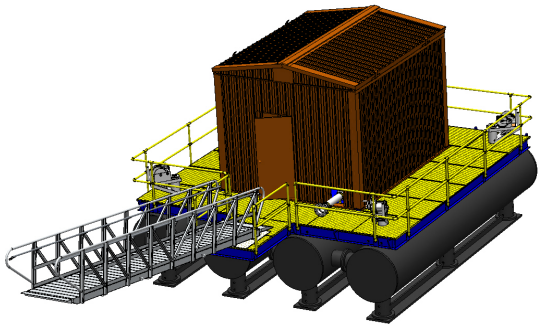

Floating Climate-Controlled Pump House

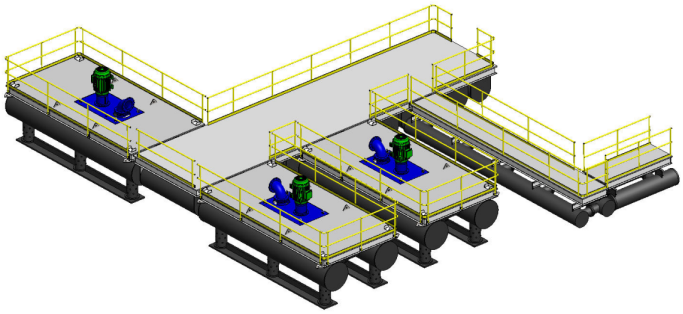

Multiple Pump Open Air Floating Barge

Mobile Self-Priming Pump House

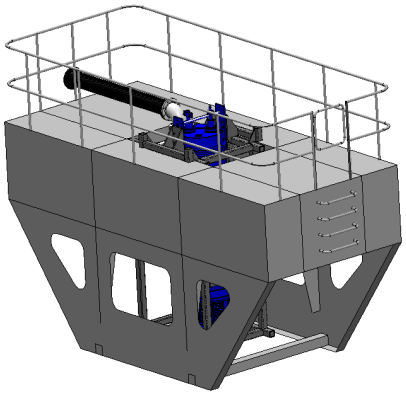

Submersible Pump in Aluminum Barge

GPM Eliminator™
MADE TOUGH

Designed for All Dewatering Conditions

GPM dewatering pump systems are built for the toughest applications and environments. With a carefully designed, heavy-duty construction built for pumping anything from clean water to abrasive solids, our dewatering solutions provide the reliabilty, dependability and performance your operation demands.

Typical Applications:

- Mine Dewatering
- Tailings Basin Control
- Process Water
- Construction Dewatering
- Reservoir/Dam Bypass
- Emergency Flood Control
- Surface Irrigation
- Environmental Remediation
- Booster Pumps
- Dredging
- Wastewater
- Solids Handling

More Dewatering Options

- Material options including cast iron, stainless steel, high-chrome, Cd4MCu, aluminum, HDPE and more
- Remote Condition Monitoring Packages
- Floating Barges
- Mobile Pumping Stations
- Electrical Supply
- Submerisble Pumps
- Vertical Turbine Pumps
- Self-Priming Pumps
- Extended Shaft Pumps
- Mixers

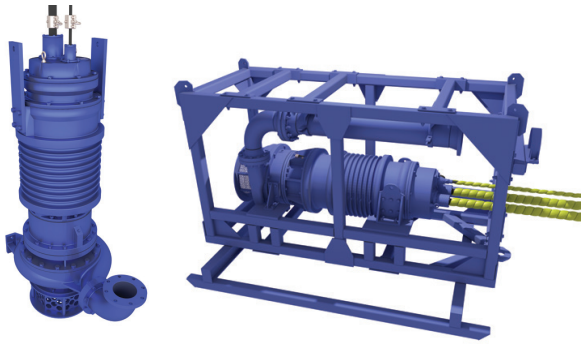

Submersible Pumps

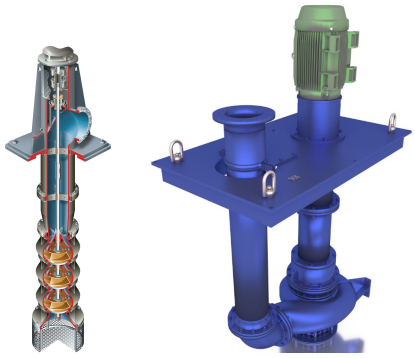

Vertical Pumps

Self-Priming Pumps

CONTACT GPM TODAY FOR YOUR NEXT DEWATERING SOLTUION

4432 Venture Avenue | Duluth, MN 55811 | (t) 218-722-9904 | www.gpmco.com | © 2020 GPM, Inc.